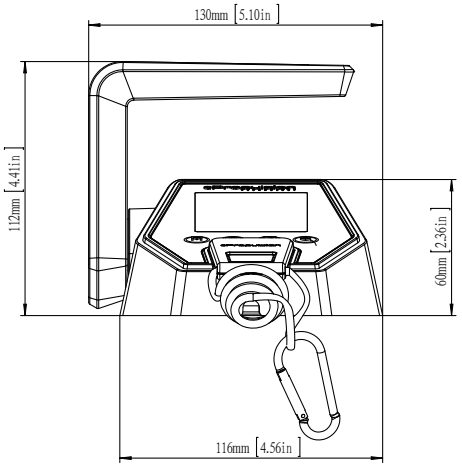

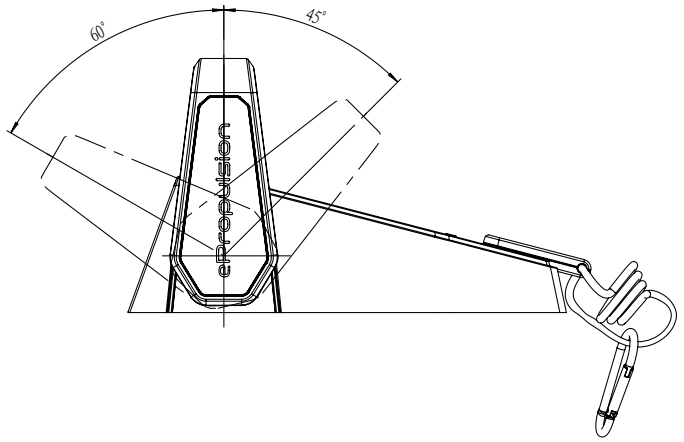

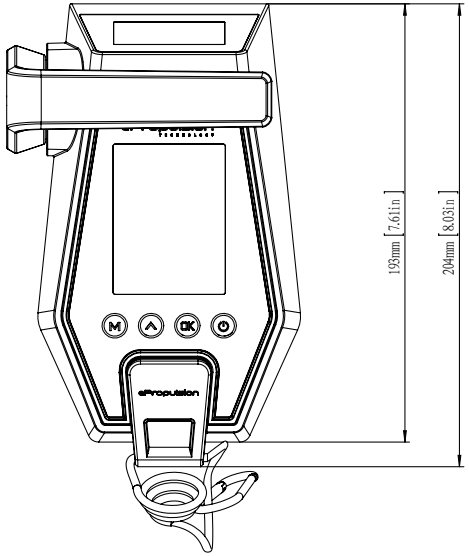

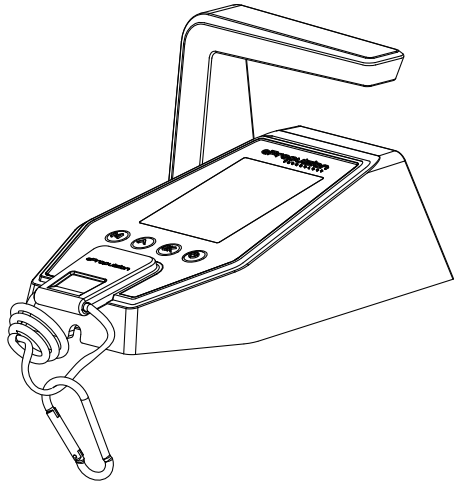

ePropulsion Spirit / Navy Remote Control		
Order Info: Navy - N6RC0000 Spirit - S1RC0000	Release Date: 2018.10.24	Version: 2.0